BA 008E/FM54i/10.25

Valid starting from
Hardware V 2.1
Software V 1.29

Flowmax® 54i

Ultrasonic flow metering / dosing device

Operating manual

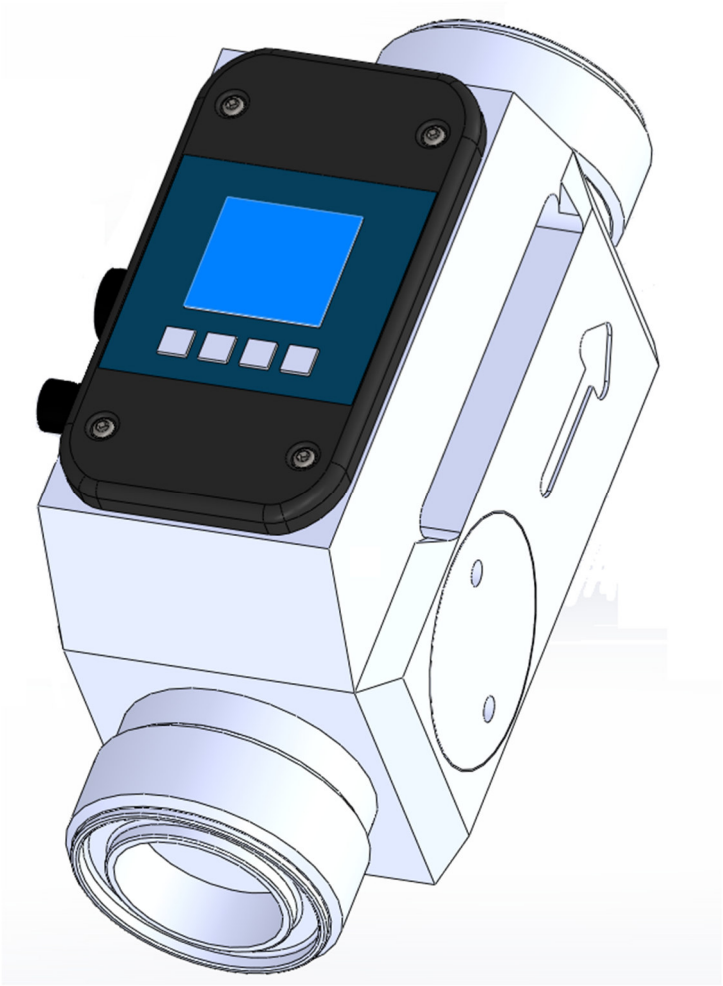

MIB GmbH
Messtechnik & Industrieberatung

General safety instructions

Please always observe the following safety instructions!
Please pay attention to the safety instructions with the following pictograms and signal words in these operating instructions:

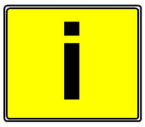

IMPORTANT!

IMPORTANT! indicates situations or cases which, if not avoided, could result in damage or failure of the Flowmax 54i equipment.

WARNING!

WARNING! indicates general hazardous situations or cases which, if not avoided, could result in serious injury or death

NOTICE!

NOTICE! is used to lead users to helpful information not related to personal injury

Intended use

- The flowmeter Flowmax 54i may only be used for measuring the flow of pure, homogeneous liquids.
- The Flowmax 54i is not intended for use in medical applications.
- The volume flowmeter Flowmax 54i is built operationally safe in accordance with the latest state of the art technologized developments and industry standard EN 61010 regulations (corresponds to VDE 0411 “Safety specifications for electrical measurement, control and laboratory devices”).
- The manufacturer is not liable for any injury, damage or harm due to inappropriate or unintended use or modifications of the flowmeter. Conversions and/or changes to the flowmeter may only be made, if they are expressly performed in accordance with the operating instructions in this operating manual.

Personnel for installation, commissioning and operation

WARNING!

- **Assembly, electrical installation, commissioning and maintenance of the flowmeter must be carried out by qualified, trained personnel. The qualified personnel must have read and understood the operating instructions in this operating manual and must follow the operating instructions in this manual**.
- **The installer has to ensure that the flowmeter is correctly connected according to the electrical connection diagrams in this operating manual.**
- **Serious injury or death from electric shock may occur if wiring, installation, disassembly or remove of wires is performed while electrical power is energized**

Technological progress

The manufacturer reserves the right to revise, alter, or modify the flowmeter to the most current technology without special prior notice. Further information about the latest updates and potential additions to these operating instructions are available from the manufacturer**.**

Table of contents

General safety instructions **2**
Table of contents **3**
Table of figures **4**
1. Planning information **5**
1.1 Areas of application 5
1.2 Measuring principle 5
1.3 Operational safety 6
2. Assembly and installation **7**
2.1 Installation instructions 7
2.2 Assembly of the flowmeter 8
2.3 Electrical wiring 10
3. Commissioning **14**
3.1 Operating 14
3.1.1 Display and user menu 15
3.2 Functionalities of flowmeter and default settings 18
3.2.1 Language 18
3.2.2 Dosing 18
3.2.3 Media 19
3.2.3.1 Set Offset 19
3.2.3.2 1-Pt-Correction 19
3.2.3.3 Creeping suppression 19
3.2.3.4 Basic Trim 20
3.2.4 General Settings 21
3.2.4.1 Reset Counter 21
3.2.4.2 TPG (tolerance against solid particles and gas inclusions) (option) 21
3.2.4.3 Empty pipe delay 21
3.2.4.4 Hysteresis 22
3.2.4.5 Lower Limit 22
3.2.4.6 Upper Limit 22
3.2.4.7 Pulse value 23
3.2.4.8 Total Counter 23
3.2.4.9 Counter 23
3.2.5 Display 24
3.2.5.1 Units 24
3.2.5.2 Filter for Display 24
3.2.5.3 Rotate Display 24
3.2.5.4 Flashing 25
3.2.6 Analog Output QA 25
3.2.6.1 Function 25
3.2.6.2 Filter 27
3.2.6.3 Output Value 27

3.2.7 Digital Output Q1 and Q2 (Q2 only available with 8-pin plug) ... 28
3.2.8 Digital Input I1 (Only available with 8-pol pin plug) ... 31
3.2.9 Diagnostic ... 31
3.2.9.1 Testing Flow ... 31
3.3 Overview of default settings ... 32
3.4 General Information ... 32
4. Exchange of flowmeter ... 33
5. Technical specifications ... 34
5.1 Dimensions and weight ... 34
5.2 Technical specifications ... 35
6. Accessories ... 38
7. Shipment ... 38
Appendix ... 39

Table of figures

Figure 1: Presentation of the principle of ultrasonic flow measuring ... 5
Figure 2: ideal installation position of Flowmax 54i ... 7
Figure 3: Mounting examples for Flowmax 54i ... 8
Figure 4: Mounting possibilities ... 9
Figure 5: Pin code: Connection plug / socket for 5-pin version ... 10
Figure 7: Pin code: Connection plug / socket for 8-pin version ... 13
Figure 8: Operating with the key pad ... 15
Figure 9: Menu structure Flowmax 54i ... 17
Figure 10: Function of creeping suppression illustrated with 0.6 l/min ... 19
Figure 11: Function Lag Creeping Flow at 15l/min ... 20
Figure 12: Function Hysteresusis at limit ... 22
Figure 13: The analog output is active ... 25
Figure 14: Characteristic curve 0 … 20mA ... 26
Figure 15: Characteristic curve 4 … 20mA ... 26
Figure 16: Function Filter of analog output ... 27
Figure 17: Connecting Digital output to relay ... 30
Figure 18: Connecting Digital output to counter ... 30

1. Planning information

1.1 Areas of application

The flow measurement device Flowmax 54i is designed to measure dynamic flow in pipes and tubes. This flowmeter is suitable for liquids only. The Flowmax 54i is used in

- Chemicals supply for controlling, logistics, monitoring
- Cooling systems, logistics, monitoring
- Process equipment for control and monitoring of formulas
- Valve control for continuous release of liquid volumes
- Supply with de-ionized water
- Very dynamic liquid processes with dosing times of below 1 second

Flowmax 54i has the following features and benefits:

- No movable parts, therefore no wear
- High repeatability
- Easy to clean
- Safe operation
- Compact design
- Integrated detection of empty conduits
- Integrated dosing function with pre-set and adjustable amounts
- Chemical resistant
- Constant pipe cross-section over the entire measurement channel

1.2 Measuring principle

It usually takes more energy to swim against the flow than with the flow. The ultrasonic flow measurement is based on the phase-difference approach:
Two ultrasonic-sensors located opposite from each other alternatively transmitting and receiving ultrasonic signals. If there is no liquid flow both sensors receive the transmitted ultrasonic signals in the same phase, i.e. without phase difference. If liquid is flowing there is a phase shift. It differs when measured in direction of the flow than when measured against the direction of the flow. This phase difference is directly proportional to the flow rate.

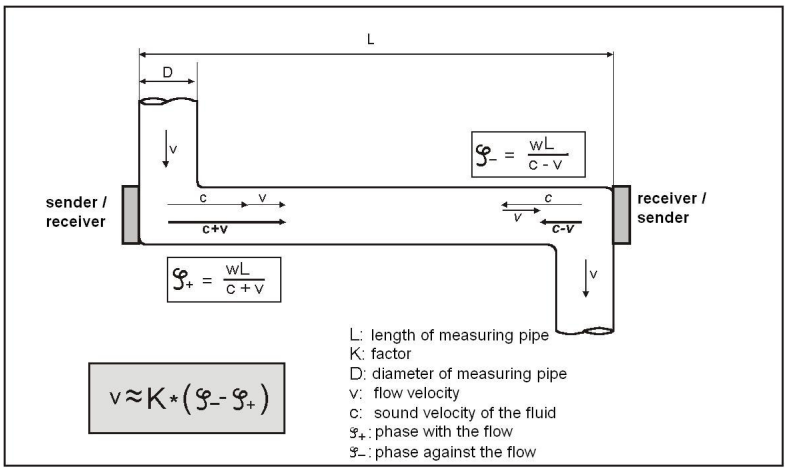

Figure 1: Presentation of the principle of ultrasonic flow measuring

1.3 Operational safety

Comprehensive self-tests ensure highest possible safety.
Faults (process or system errors) are output on a digital output or displayed on the display menu.

The protection class is IP 65.

Flowmax 54i meets the general EMC immunity requirements according to CE, EN 61000-6-3, EN 61000-4-2, EN 61000-4-3, EN 61000-4-4, EN 61000-4-5, EN 61000-4-6.

Flowmax 54i meets the safety requirements concerning the Protective Extra Low Voltage directive according to EN 50178, SELV, PELV.

2. Assembly and installation

2.1 Installation instructions

The arrow on the nameplate of the Flowmax 54i shows the positive flow direction. The flowmeter has to be installed in a way so that the flow-through is in the same direction as the arrow symbol.

NOTICE!

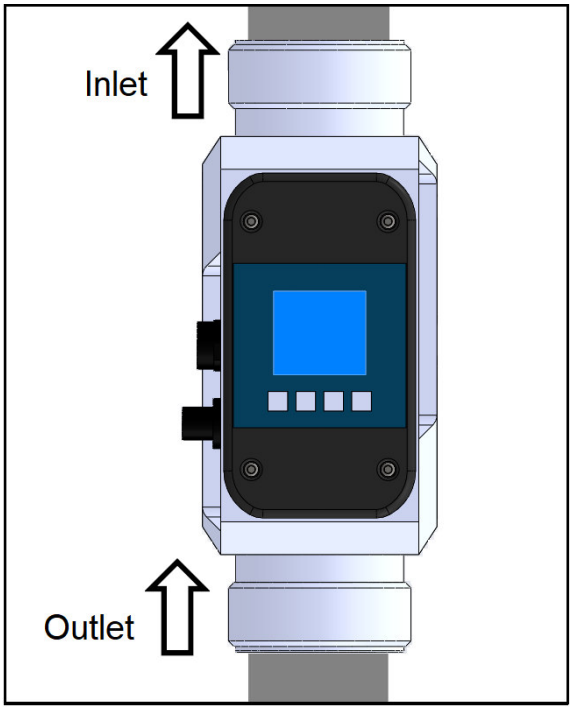

Figure 2: ideal installation position of Flowmax 54i

For fastest possible bubble detection it is important to keep the pipe distance from tank to Flowmax 54i as short as possible. Accurate measurement can only be assured, if the pipe is completely filled and the liquid does not outgas.

Notwithstanding it may be advantageous for dosing applications to install the Flowmax 54i as close as possible to the dosing valve, as soft pipes change the cross-section depending on the system pressure. This may lead to repeatable differences.

Insure that no cavitation dissolve from the measured liquid. Depending on the measured liquid it can be helpful to have enough back pressure on the outlet of Flowmax 54i to avoid cavitation. Insure all mechanical connections are tight.

NOTICE!

Particles present in the flow stream may result in measuring errors!

When using pumps, Flowmax 54i must be installed in flow direction on the pressure side, in order to ensure sufficient pressure. The maximum pressure rating of Flowmax 54i has to be considered.

For correct volume flow measurements straight and unobstructed inflow and outflow distances have to be observed. Starting from the connection thread these straight and unobstructed flow zones must be:

Nominal diameter	DN25	DN 32	DN 40	DN50
Inflow distance	30cm	40cm	45cm	60cm
Outflow distance	20cm	20cm	20cm	20cm

2.2 Assembly of the flowmeter

The flowmeter is mounted into a pipe system by using the mechanical connection. Flowmax 54i should be mounted vertically into the pipe for the best measuring performance. Do not install the flowmeter after a dosing valve where the flowmeter can run empty. Placing the flowmeter after a dosing valve and allowing it to run empty will cause a measuring deviation at the next measurement. To avoid bubbles in the liquid, Flowmax 54i should be installed on the pressure side of the pump.
It is recommended to place the pump in the same plane as the container. Thus, the pump runs independently full and there is caused no vacuum when promoting.

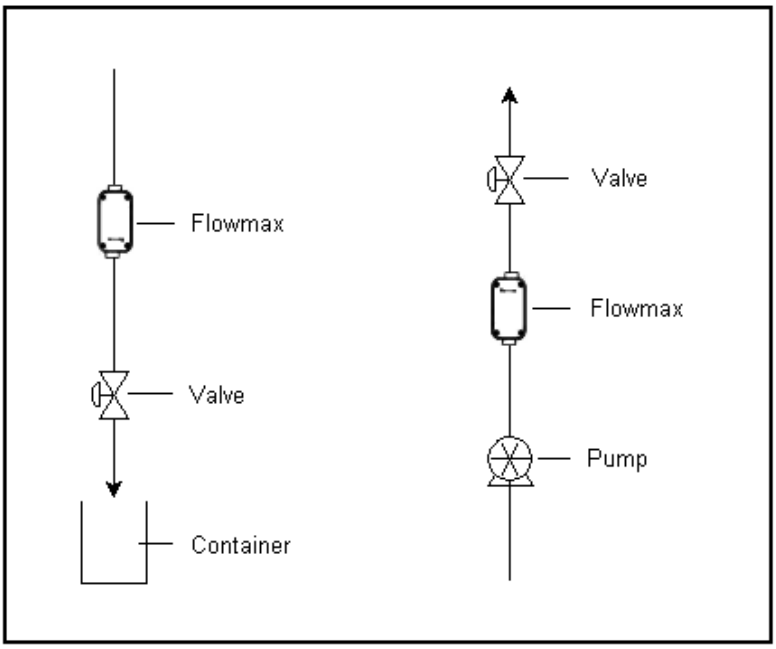

Figure 3: Mounting examples for Flowmax 54i

If it is not possible to mount the flowmeter vertically, then mount the flowmeter in a location where the pipe will be filled at all times. The best measuring result is achieved if bubbles do not pass through Flowmax 54i.

IMPORTANT!
The Flowmax 54i must be installed without mechanical tensions on the existing pipe system. The flowmeter may be damaged if there is tension on the existing pipe system.
The hydraulic screw connections on the process side must be hand-tightened.

IMPORTANT!

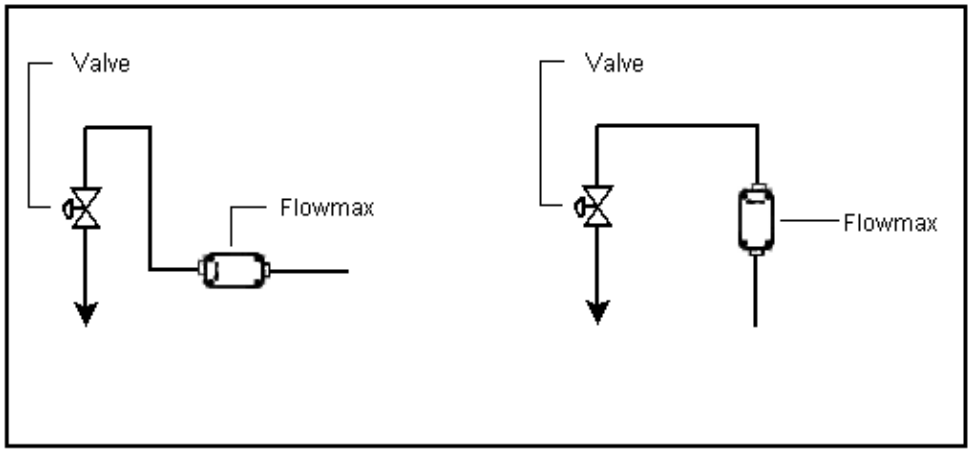

Figure 4: Mounting possibilities

Vibrations or mechanical forces may decrease measuring accuracy.

2.3 Electrical wiring

Do not install, wire or dismantle the measuring device while it is under operating voltage. The supply voltage to the Flowmax 54i must be switched off during these procedures.

Figure 5: Pin code: Connection plug / socket for 5-pin version

<u>5-pin plug assignment with factory-assigned outputs</u>
The inputs and outputs can be parametrized for specific applications.

5-pin plug with 1-wire communication:

Pin	Function	Description
1	24 VDC	Power supply: 18 ... 30 VDC
2	Digital Output Q1	Freely adjustable in the range from 0.1 to 3000 ml/pulse (or ml/s/Hz), in steps of 0.1. NPN or PNP transistor. Maximum load 100mA. Max. Voltage must be less than supply voltage.
	1. Pulse Output	Output in ml/pulse, depending on the pulse value setting.
	2. Increased tolerance for particle or gas inclusions (TPG)	Programmable output of 0V or 24V on detection of solid particles or air bubbles and change to “TPG” software mode.
	3. Frequency output	Output in Hz, depending on the pulse value setting.
	4. Dosing	Programmable output of 0V or 24V while dosing is running.
	5. Negative Flow	Programmable output of 0V or 24V in case of negative flow.
	6. Lower or upper limit (limit value monitoring)	Programmable output of 0V or 24V when an adjustable limit is undercut/exceeded.
	7. Empty Pipe	Programmable output of 0V or 24V when the measuring pipe is empty or too many bubbles/particles detected.
3	GND	Power supply ground: 0 V
4	Communication	Communication interface
5	Analog Output QA	4 ... 20mA; 0 ... 20mA
		For example: 0l/min → 4mA 36l/min → 20mA (depending on the nominal diameter) Empty pipe alarm → 3,5mA

5-pin plug with RS485 communication and analog output:

Pin	Function	Description	
1	24 VDC	Power Supply: 18 ... 30 VDC	
2	Communication	RS485B	
3	GND	Power supply ground: 0 V	
4	Communication	RS485A	
5	Analog Output QA	4 ... 20mA; 0 ... 20mA	
		For example:	0l/min → 4mA 36l/min → 20mA (depending on the nominal diameter) Empty pipe alarm → 3,5mA

5-pin plug with RS 485 – communication and digital output Q1:

Pin	Function	Description
1	24 VDC	Power Supply: 18 ... 30 VDC
2	Digital Output Q1	Freely adjustable in the range from 0.1 to 3000 ml/pulse (or ml/s/Hz), in steps of 0.1. NPN or PNP transistor. Maximum load 100mA. Max. Voltage must be less than supply voltage.
	1. Pulse Output	Output in ml/pulse, depending on the pulse value setting.
	2. Increased tolerance for particle or gas inclusions (TPG)	Programmable output of 0V or 24V on detection of solid particles or air bubbles and change to “TPG” software mode.
	3. Frequency output	Output in Hz, depending on the pulse value setting.
	4. Dosing	Programmable output of 0V or 24V while dosing is running.
	5. Negative Flow	Programmable output of 0V or 24V in case of negative flow.
	6. Lower or upper limit (limit value monitoring)	Programmable output of 0V or 24V when an adjustable limit is undercut/exceeded.
	7. Empty Pipe	Programmable output of 0V or 24V when the measuring pipe is empty or too many bubbles/particles detected.
3	GND	Power supply ground: 0 V
4	Communication	RS485A
5	Communication	RS485B

8-pin plug with 1-wire communication:

Figure 1: Pin code: Connection plug / socket for 8-pin version

8-pin plug assignment with factory-assigned outputs

Pin	Function	Description
1	24 VDC	Power Supply: 18 ... 30 VDC
2	Digital Output Q1	Freely adjustable in the range from 0.1 to 3000 ml/pulse (or ml/s/Hz), in steps of 0.1. NPN or PNP transistor. Maximum load 100mA*. Max. Voltage must be less than supply voltage.
	1. Pulse Output	Output in ml/pulse, depending on the pulse value setting.
	2. Increased tolerance for particle or gas inclusions (TPG)	Programmable output of 0V or 24V on detection of solid particles or air bubbles and change to “TPG” software mode.
	3. Frequency output	Output in Hz, depending on the pulse value setting.
	4. Dosing	Programmable output of 0V or 24V while dosing is running.
	5. Negative Flow	Programmable output of 0V or 24V in case of negative flow.
	6. Lower or upper limit (limit value monitoring)	Programmable output of 0V or 24V when an adjustable limit is undercut/exceeded.
	7. Empty Pipe	Programmable output of 0V or 24V when the measuring pipe is empty or too many bubbles/particles detected.
3	GND	Power supply ground: 0 V
4	Digital Output Q2	Freely adjustable in the range from 0.1 to 3000 ml/pulse (or ml/s/Hz), in steps of 0.1. NPN or PNP transistor. Maximum load 100mA*. Max. Voltage must be less than supply voltage.
	1. Pulse Output	Output in ml/pulse, depending on the pulse value setting.
	2. Increased tolerance for particle or gas inclusions (TPG)	Programmable output of 0V or 24V on detection of solid particles or air bubbles and change to “TPG” software mode.
	3. Frequency output	Output in Hz, depending on the pulse value setting.
	4. Dosing	Programmable output of 0V or 24V while dosing is running.
	5. Negative Flow	Programmable output of 0V or 24V in case of negative flow.
	6. Lower or upper limit (limit value monitoring)	Programmable output of 0V or 24V when an adjustable limit is undercut/exceeded.
	7. Empty Pipe	Programmable output of 0V or 24V when the measuring pipe is empty or too many bubbles/particles detected.
5	Analog Output QA	4 ... 20mA; 0 ... 20mA
		For example: 0l/min → 4mA 36l/min → 20mA (depending on the nominal diameter) Empty pipe alarm → 3,5mA
6	Communication	Communication interface
7	Digital input I1	
	1. Dosing	Starts the dosing process at 24V edge.
	2. Set Offset	Starts offset adjustment, at 24V edge.
	3. Reset Counter	Reset the counter on 24V edge
	4. Creeping Flow Off	Deactivates the creeping flow suppression while 24V is active.
8	Shield	EMC safety

* Q1 + Q2 ≤ 100mA

8-pin plug with RS 485 communication:

Figure 6: Pin code: Connection plug / socket for 8-pin version

Pin	Function	Description
1	24 VDC	Power supply: 18 ... 30 VDC
2	Digital Output Q1	Freely adjustable in the range from 0.1 to 3000 ml/pulse (or ml/s/Hz), in steps of 0.1. NPN or PNP transistor. Maximum load 100mA. Max. Voltage must be less than supply voltage.
	1. Pulse Output	Output in ml/pulse, depending on the pulse value setting.
	2. Increased tolerance for particle or gas inclusions (TPG)	Programmable output of 0V or 24V on detection of solid particles or air bubbles and change to “TPG” software mode.
	3. Frequency output	Output in Hz, depending on the pulse value setting.
	4. Dosing	Programmable output of 0V or 24V while dosing is running.
	5. Negative Flow	Programmable output of 0V or 24V in case of negative flow.
	6. Lower or upper limit (limit value monitoring)	Programmable output of 0V or 24V when an adjustable limit is undercut/exceeded.
	7. Empty Pipe	Programmable output of 0V or 24V when the measuring pipe is empty or too many bubbles/particles detected.
3	GND	Versorgungsmasse: 0 V
4	Digital input I1	
	1. Dosing	Starts the dosing process at 24V edge.
	2. Set Offset	Starts offset adjustment, at 24V edge.
	3. Reset Counter	Reset the counter on 24V edge
	4. Creeping Flow Off	Deactivates the creeping flow suppression while 24V is active.
5	Analog Output QA	4 ... 20mA; 0 ... 20mA
		For example: 0l/min → 4mA 36l/min → 20mA (depending on the nominal diameter) Empty pipe alarm → 3,5mA
6	Communication	RS485A
7	Communication	RS485B
8	Shield	EMC safety

ATTENTION:
The Flowmax 54i measuring device may only be operated within the limits specified on the nameplate and in the operating manual/data sheet. Unauthorized operating conditions can lead to overloads, damage or defects.

3. Commissioning

NOTE:
After starting up the electronics, the device is ready for use, but it reaches its optimum operating state after 30 minutes. It makes sense to carry out a basic trim or set offset adjustment only after this warm-up phase.

NOTICE!

NOTE:
If Flowmax 54i used for a fluid other than water, the "basic trim" has to be carry out during commissioning. Therefore, the device has absolutely be filled with medium.
The basic trim can be carried out via the device display (alternatively FlowCon 200i). During the adjustment, the medium may not flow, as this can lead to a measurement deviation. If there is a possible flow, it will be stored as "zero point".

NOTICE!

3.1 Operating

If Flowmax 54i is used as a flowmeter for water or water-like liquids, it generally requires no on-site operation, as the parameters listed below have a factory setting that ensures optimal function. However, Flowmax 54i can also be supplied with customer-specific settings.

NOTE: If necessary, e.g. if viscosity and/or speed of sound deviate significantly from water, the pre-set parameters can be adjusted via the display or FlowCon 200i.

NOTICE!

The following parameters may be changed to settings suitable for the individual conditions: for 5-pin version

- Digital output Q1, function and behavior
- Analog output QA, function and behavior
- Flow range, for which shall apply 4 ... 20mA resp. 0 … 20mA
- Pulse value
- Creeping suppression
- RS485 Communication (option)
- Optimization of measurement curve with up to 8 interpolation values (Medium matrix requires FlowSoft*)

The following parameters may be changed to settings suitable for the individual conditions: for 8-pin version

- Digital output Q1, function and behavior
- Digital output Q2, function and behavior
- Digital input I1, function and behavior
- Analog output QA, function and behavior
- Flow range, for which shall apply 4 ... 20mA resp. 0 … 20mA
- Pulse value
- Creeping suppression
- RS485 Communication (option)
- Optimization of measurement curve with up to 8 interpolation values (Medium matrix requires FlowSoft*)

*FlowSoft is the MIB programming software (option)

3.1.1 Display and user menu

Flowmax 54i is equipped with a display to visualize actual measurement values and to change parameters of the flowmeter. Menu navigation and parameter changes are controlled by the four keys on the foil keypad.

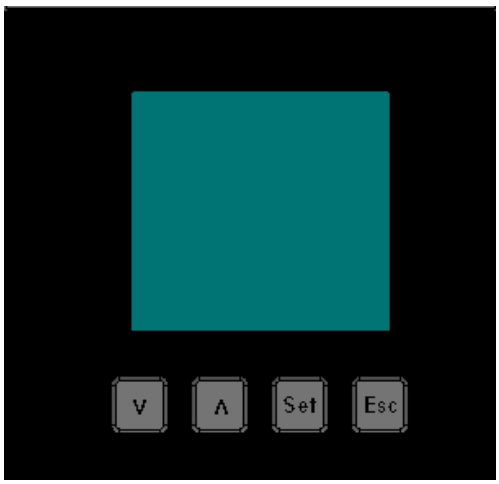

Figure 7: Operating with the key pad

Press the “Set” key to display the main menu. Different menu options can be select by using the two arrow keys. To confirm a menu item, press the “Set” button again.
To enter e.g. analog limits “Analog output – max Range” use the arrow keys to change values and press “Set” to confirm. To switch back to the last menu level press the “Esc” key. As soon as a parameter needs to be changed via the display menu, a password must be entered. Password protection is used to ensure changes to values or configurations are done by authorized personnel. The default password for Flowmax 54i is **41414**. The user level will remain active for 30 minutes after the last press on any button. 200 seconds after the last key press, the device skips the menu and returns to the display mode, which does not apply to the menu items diagnostic and dosing. Here, the device remains in the submenu until the operator exits the submenu again with the ESC key.
Operating examples see appendix.

NOTE:
The display always shows the currently set activated parameter of the menu first. The activated parameter is inverted.

NOTICE!

NOTE:
In the menu all the possible functions of the device are visible.

NOTICE!

The functions of Digital Output Q2 and Digital Input I1 are only available on the Flowmax version with 8-pin plug.

The “PID controller” and “speed of sound” functions, displayed under the Analog output - Output value menu item, are only provided with functionality if they were selected when ordering (option).

Flowmax 54i without display has the same features as the display version, but you can change parameters only with the FlowCon 200i display and programming unit. (option)

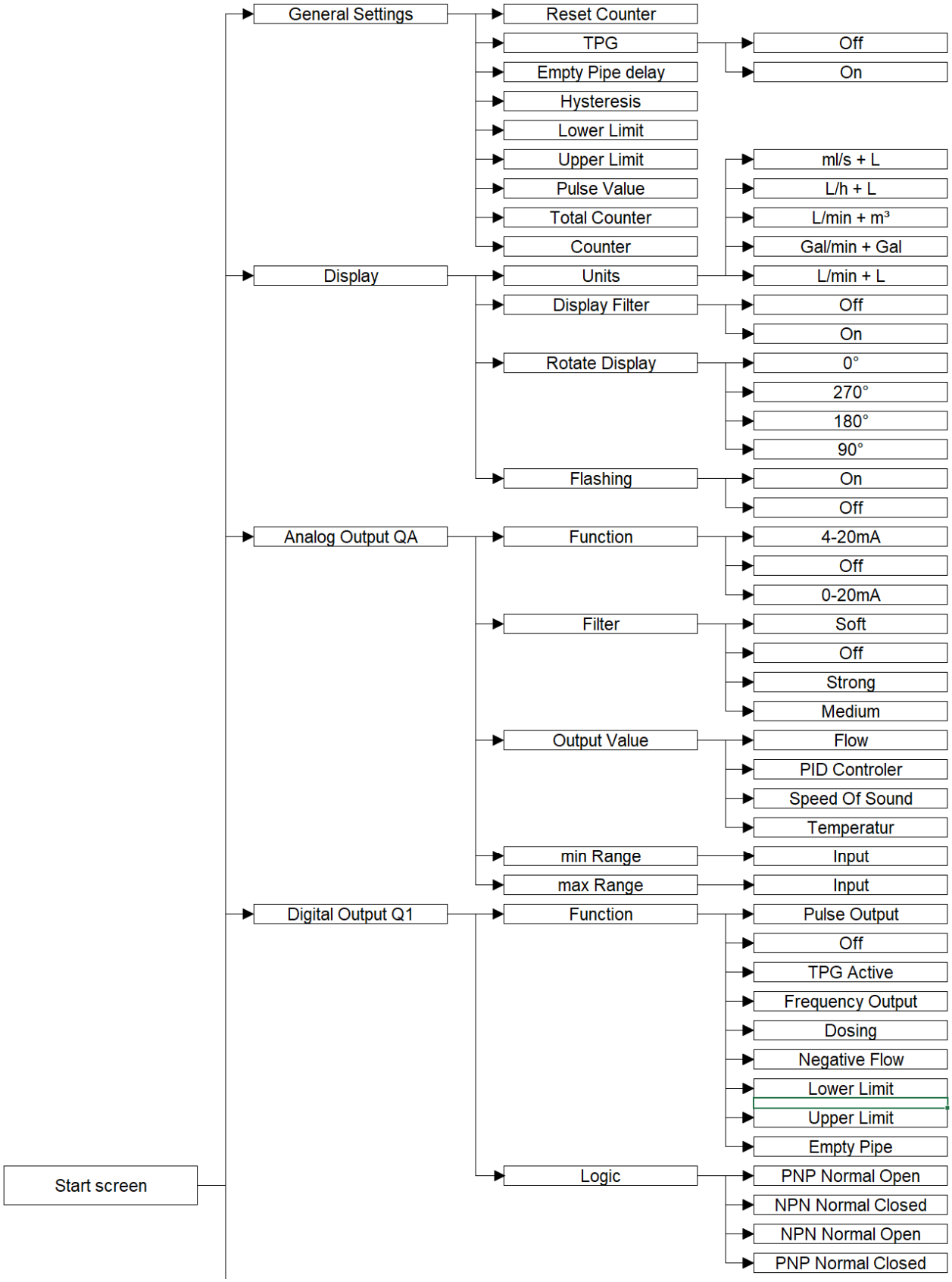
Start screen
General Settings
Reset Counter
TPG
Off
On
Empty Pipe delay
Hysteresis
Lower Limit
Upper Limit
ml/s + L
Pulse Value
L/h + L
Total Counter
L/min + m³
Counter
Gal/min + Gal
Display
Units
L/min + L
Display Filter
Off
On
Rotate Display
0°
270°
180°
90°
Flashing
On
Off
Analog Output QA
Function
4-20mA
Off
0-20mA
Filter
Soft
Off
Strong
Medium
Output Value
Flow
PID Controler
Speed Of Sound
Temperatur
min Range
Input
max Range
Input
Digital Output Q1
Function
Pulse Output
Off
TPG Active
Frequency Output
Dosing
Negative Flow
Lower Limit
Upper Limit
Empty Pipe
Logic
PNP Normal Open
NPN Normal Closed
NPN Normal Open
PNP Normal Closed

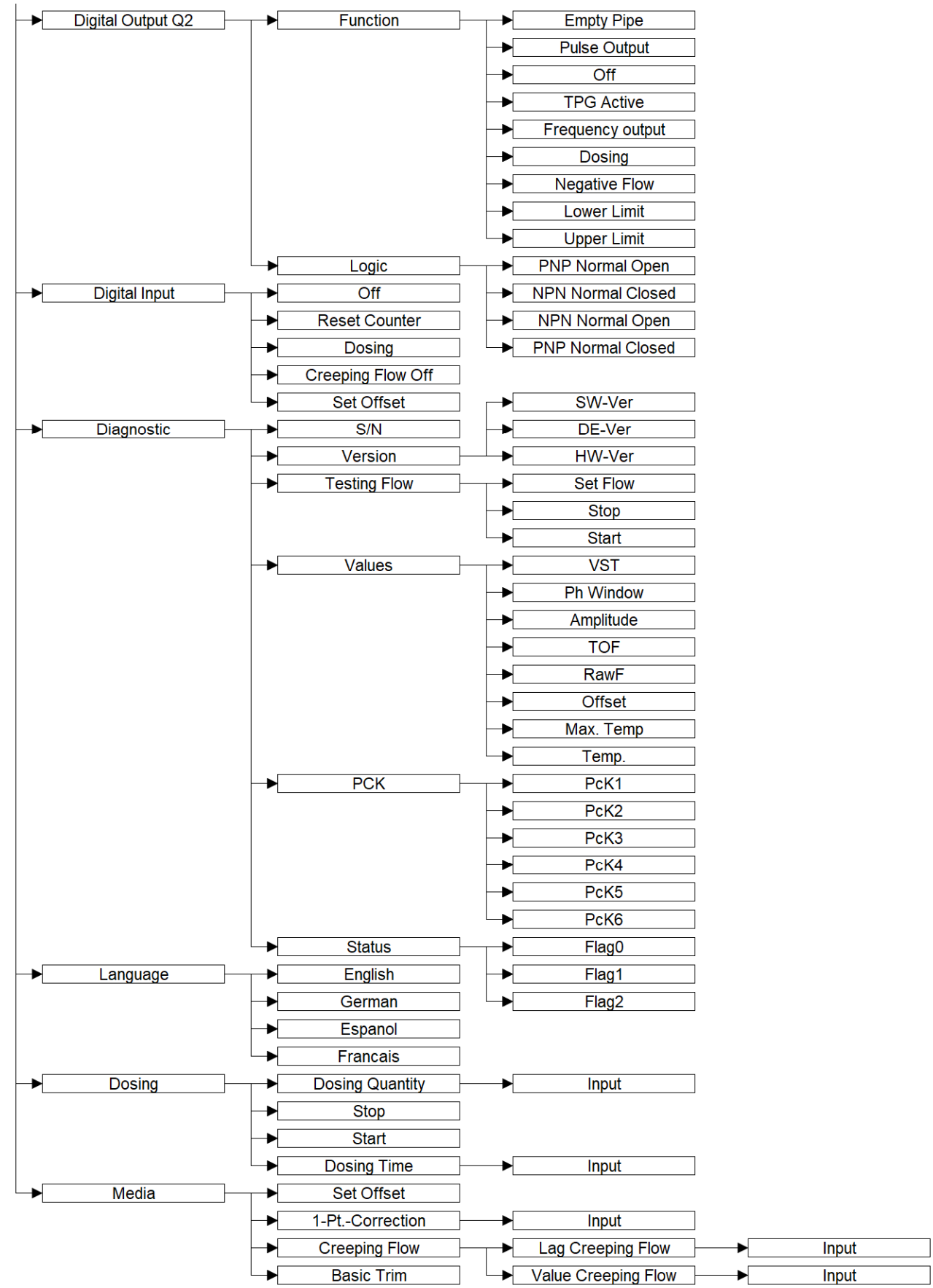

Figure 8: Menu structure Flowmax 54i

3.2 Functionalities of flowmeter and default settings

3.2.1 Language

The language of the display can be changed. Available languages are English, Spanish, French and German.

3.2.2 Dosing

The Flowmax 54i can be configured for manually dosing by choosing the dosing function via the user display. The Volume “Dosing Quantity“ and the “Dosing Time“ are freely adjustable. The dosing time is intended as a safeguard against unintentional overspill. After the set time has passed, the output switches regardless of the measured quantity. When “Dosing Time“ is set to zero, the timer control is inactive. A dosage can be started and stopped with the menu function keys “Start“ and “Stop“.

Setting range “Dosing Quantity”:	0 … 3500 liters, in steps of 0.001 liters
Default setting “Dosing Quantity”:	0 liters
Setting range “Dosing Time”	0 … 30000 Seconds, in steps of 1 sec, having an accuracy of +0/-1 sec
Default setting “Dosing Time”:	3 Seconds

Example:
Dosing time = 3 seconds. That means Flowmax is sending the closing signal after 2.1 to 3.0 sec to the valve. The dosing time is intended as a safety function and should be selected insignificantly longer than the actual time required for dosing. This ensures that possible malfunctions/leakages in the structure/system are detected at an early stage. An exact dosage purely on the dosing time is not useful.

IMPORTANT!
If Dosing Time = 0 the time switch-off is inactive.
To be able to activate dosing, a digital output must be parameterised for dosing. Dosing can be started both via the menu and via the digital input.

IMPORTANT!

WARNING!
The customer has to provide a technical solution for overfill protection and an emergency stop switch. Both functions must lead to valve shutoff for safety reasons.

WARNING!

3.2.3 Media

3.2.3.1 Set Offset

In the sub menu “Set Offset” it is possible to set the actual offset of the flowmeter. Use this function only when Flowmax 54i is completely filled with liquid and there is no flow, as this condition is the new “zero” value.
Example of operation see appendix.

Flowmax 54i automatically does a small offset change, e.g. caused by variable temperatures. It is also possible to set the offset via the configurable digital input I1.

IMPORTANT!
In contrast to the basic trim, the Set Offset is not stored in the device. When the Flowmax 54i is restarted, the original, last stored value is active.

IMPORTANT!

3.2.3.2 1-Pt-Correction

Setting range:	-50.0 ... 50.0 % in steps of 0.1%
Default setting:	0 %

Example of operation see appendix.

3.2.3.3 Creeping suppression

Creeping flow suppression is used to exclude flows from the measurement that can occur within a narrow range around zero, even when the valve is closed, due to convection. The factory setting of the creeping flow suppression is set to a sensible standard value in relation to the cross-section of the measuring device.

There are higher tolerances below the standard default settings, see also section 5.2 → “measurement deviation”!

Creeping suppression works with a hysteresis of 0% to - 25%.

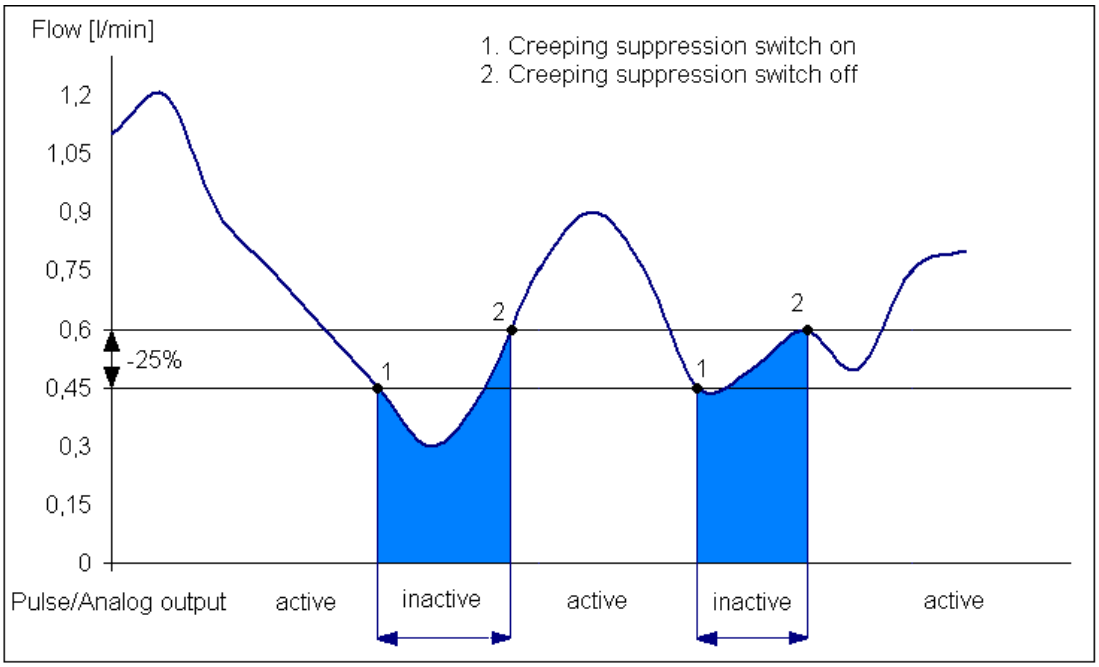

Figure 9: Function of creeping suppression illustrated with 0.6 l/min

Example: If the flow rate falls below a value of 0.45 l/min, creeping flow suppression is activated. If the flow rate exceeds 0.6 l/min, the flow rate is again output as a pulse and added to the daily quantity counter. A value is also displayed to the analog output again.

Setting range:
DN25: 0.0 … 19.2 l/min in 0.0006 l/min steps
DN32: 0.0 … 192.0 l/min in 0.006 l/min steps
DN40: 0.0 … 192.0 l/min in 0.006 l/min steps
DN50: 0.0 … 192.0 l/min in 0.006 l/min steps

Default settings:
DN25: 5 l/min
DN32: 9 l/min
DN40: 18 l/min
DN50: 36 l/min

Lag Creeping Flow

The activation of the creeping suppression can be delayed. The value is adjustable via menu.

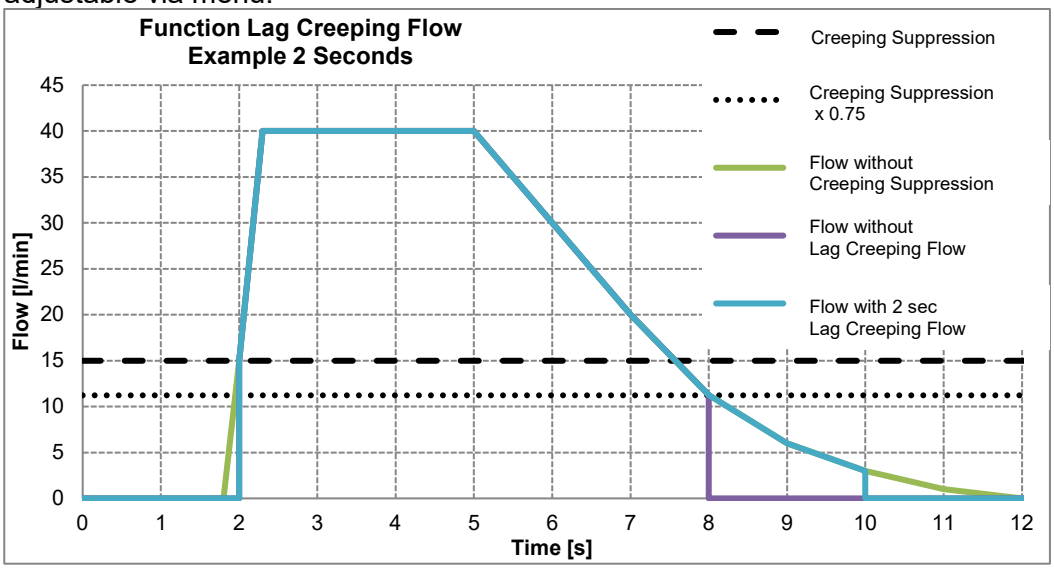

Figure 10: Function Lag Creeping Flow at 15l/min

Setting range: 0 ... 99.0 s in steps of 0.1 s
Default settings: 0.5s

3.2.3.4 Basic Trim

The “Basic trim” function enables optimum adjustments to the medium-specific characteristics. By executing this function, Flowmax 54i runs through an internal parameterization and saves relevant parameters automatically. This process can take up to approx. 1 minute.

NOTICE!

IMPORTANT!
To ensure that the calibration can be carried out correctly, the device must be filled with liquid and there must be no flow.
If an error is detected during adjustment, e.g. because the device is not filled, “Error” appears on the display. If the calibration was performed successfully, the message “Completed” is displayed.

IMPORTANT!

3.2.4 General Settings

3.2.4.1 Reset Counter

The volume counter of Flowmax 54i can be reset.
Example of operation see appendix.

IMPORTANT!
Accidentally deleted counter readings can't be restored. After the reset, the count starts again at the value 0.

IMPORTANT!

3.2.4.2 TPG (tolerance against solid particles and gas inclusions) (option)

Ultrasonic flow measurement is a volume measurement. A precise measurement can only be guaranteed if the pipe is completely filled and the liquid is not outgassed or doesn't contain any solid particles. Gas bubbles and solid particles lead to measurement errors and can result in an alarm message if they occur more frequently. The TPG function can tolerate a significantly higher amount of gas bubbles or solid particles and therefore enables the flow measurement to be maintained for a longer period of time.
If the maximum possible amount of air bubbles or particles is exceeded, the Flowmax switches to the empty pipe alarm.
When the option is activated, the Flowmax automatically switches to “TPG” mode if the reception amplitude is insufficient. The active status is shown in the top line of the display and emitted at the digital output, provided this has been parameterized with the function.

Setting range:	Off, On
Default settings:	Off

3.2.4.3 Empty pipe delay

Small air bubbles or particles, which are carried with the liquid, disturb the sound transmission in the measuring pipe.
The last undisturbed flow value is output during the set time, but for a maximum of 3 seconds. After that, the behavior is similar to a non-existent flow rate. The measuring device only switches to alarm status after the configured delay time.

Setting range:	0.0 … 3000.0 s
Default settings:	DN25: 0.3s
	DN32: 0.3s
	DN40: 0.3s
	DN50: 0.5s

3.2.4.4 Hysteresis

The limit values can be provided with a hysteresis. This is to prevent frequent switching of the outputs when the flow moves around a limit value.

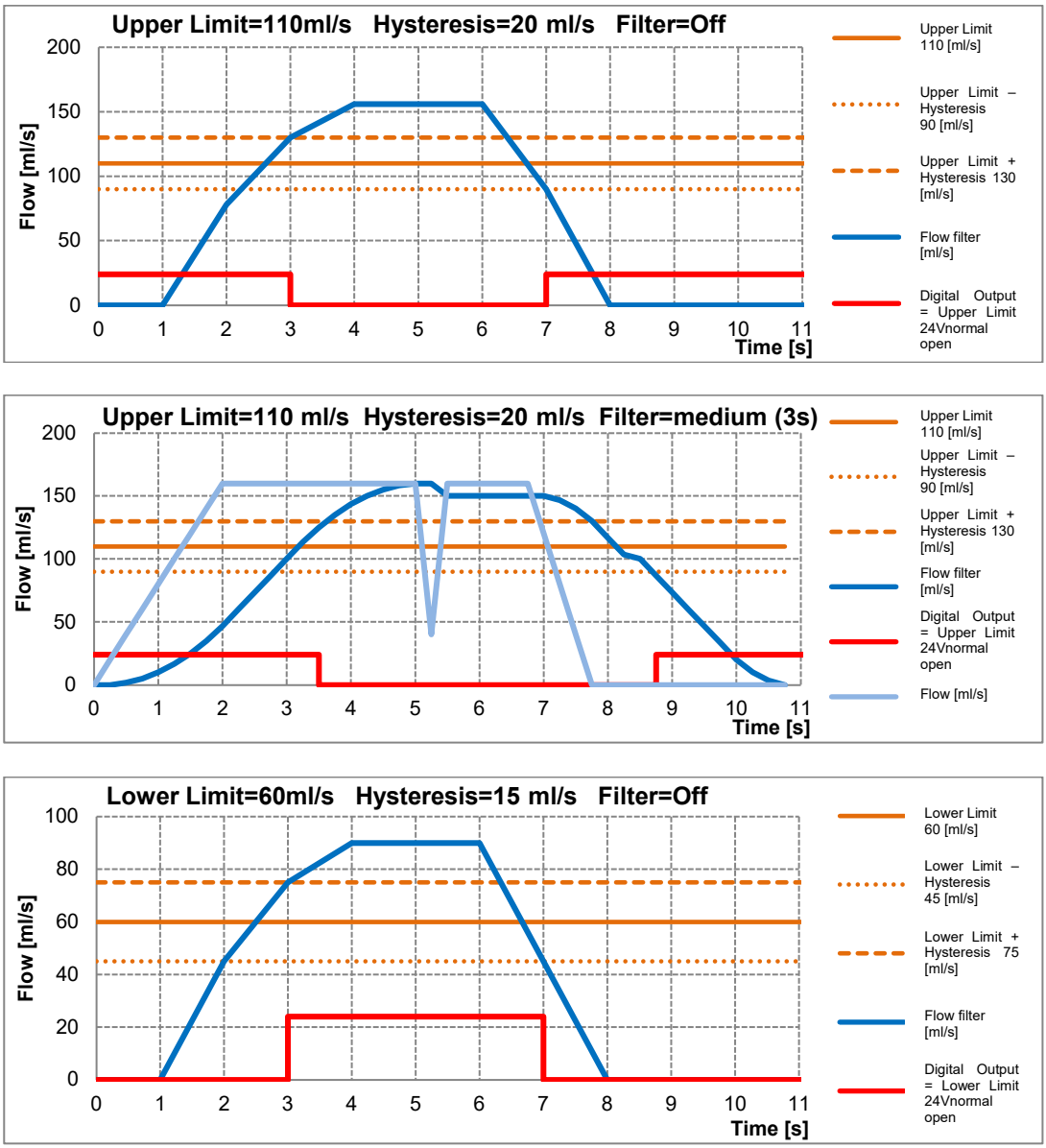

Figure 11: Function Hysteresusis at limit

Setting range: 0 … 480 l/min in steps of 0.0006 l/min.
Default settings: 0 for all DN

3.2.4.5 Lower Limit

Here, the lower limit for the digital output is set.
Setting range: 0 … 900 l/min in steps of 0.06 l/min (DN25: 0.0006 l/min)
Default settings: 0 for all DN

3.2.4.6 Upper Limit

Here, the lower limit for the digital output is set.
Setting range: 0 … 900ml/s in steps of 0.06 l/min (DN25: 0.0006 l/min)
Default settings: max. flow of the flowmeter
DN25: 180 l/min
DN32: 300 l/min
DN40: 480 l/min
DN50: 900 l/min

3.2.4.7 Pulse value

Here you can specify the flow rate, sonic speed (Speedmax option), or temperature at which an output pulse is displayed.

Choose a configuration which will neither exceed the maximum output frequency of the Flowmax 54i (10kHz) nor the maximum input frequency of the PLC. The pulse/pause ratio is 1:1. The pulse length is limited to 1s.

Example: 2.0 ml/pulse

This means: a pulse is emitted every 2.0 ml.
Setting range: 0.1 ... 3000.0 ml/pulse, in steps of 0.1 ml/pulse
Default setting: 10.0 ml/pulse for all DN

Flow	Pulse value	Frequency	Period	Duration of the pulse	
ml/s	ml/pulse	Hz	s	s	ms
1	1	1	1	0.5	500
100	1	100	0.01	0.005	5
1000	0.1	10000	0.0001	0.00005	0.05
100	10	10	0.1	0.05	50
0.5	10	0.05	20	1	1000

In the last case every 20 seconds, a pulse of 1 second duration is put out.

3.2.4.8 Total Counter

NOTICE!

The Total Counter can be displayed in the menu. The unit is fixed to m³. This counter is unidirectional and can therefore differ from the daily counters.
The Total Counter can´t be set to zero!

3.2.4.9 Counter

The counter that appears on the standard screen is the daily quantity counter. The unit corresponds to the currently set one. The behavior of the daily quantity counter

a) at daily amount in [l]

from [l]	to [l]	resolution display [l]
0,000	14000	0.001
14000	28000	0.002
28000	56000	0.004
56000	112000	0.008
112000	225000	0.016
225000	445000	0.032
445000	1000000	0.064

Once the counter has reached 1000000 liters, it automatically begins to count up from zero. The total counter continues to run without being reset.

b) at daily amount in [m³]

from [m³]	to [m³]	resolution display [m³]
0.000	14000	0.001
14000	28000	0.002
28000	56000	0.004
56000	112000	0.008
112000	225000	0.016
225000	461204	0.032

rounding error -0.05%

Once the counter has reached 461204 m³ it automatically begins to count up from zero. Total counter runs without resetting on.

c) at daily amount in [US-Gal]

from [Gal]	to [Gal]	resolution display [Gal]
0.000	14000	0.001
14000	28000	0.002
28000	58000	0.004
58000	112000	0.008
112000	225000	0.016
225000	460000	0.032
445000	1000000	0.064

rounding error +0.12%

Once the counter has reached 1000000 Gal it automatically begins to count up from zero. Total counter runs without resetting on.

3.2.5 Display

3.2.5.1 Units

Flowmax 54i is able to show actual flow or the volume in different units.

Setting range: ml/s + l, l/h + l, l/min + m³, Gal/min +Gal, l/min + l
Default setting: ml/s + l

Example: ml/s + l
Here, the flow appears in the unit "ml / s" (milliliters per second) and the daily amount in "l" (liters).

Gal are US Gal with 1 Gal = 3.785 l.

3.2.5.2 Filter for Display

The indicated flow can additionally be filtered. This filter is an average over the last 16s. It can be activated and deactivated via the menu.

Setting range: Off, On
Default setting: On

3.2.5.3 Rotate Display

The display can be rotated in steps of 90°.
Setting range: 0°, 270°, 180°, 90°
Default setting: 0°

3.2.5.4 Flashing

The display flashes in case off an error. This can be switched off.
When activating the alarm flashing, the backlight first flashes after 150s. The time is extended by the set empty pipe delay time, when the empty pipe delay is active.

Setting range: On, Off
Default setting: On

The alarm flashing can be muted for 150 seconds by pressing the ESC key.

3.2.6 Analog Output QA

3.2.6.1 Function

The Analog Output is an active current output with 0 … 20mA or 4 … 20mA. It can be adjusted via the display menu or FlowCon 200i.

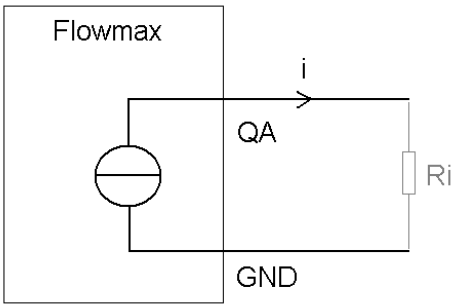

Figure 12: The analog output is active

Setting range: 0 … 20mA, 4 … 20mA, Off
Default setting: 4 … 20mA

The analog output ranges from 0 to 22.6mA measuring the flow rate or the condition of the flow measurement.

The values here signify for 4 … 20mA configuration:

- 20 mA the max range of the relevant measurement
- 4 mA the min range of the relevant measurement
- 3.5 mA empty pipe

Max range and min range parameters can be set within the type-specific measurement of the device. The value of the max range must be greater than the value of the min range, so that the values are stored. By default, the min range is 0 mA or 4 mA and the respective end of the measuring range is set to 20 mA.

IMPORTANT!
If the analog output is used, the maximum resistance Ri should not be more than 500 Ohm, otherwise it can't be guaranteed that the measuring device can deliver the maximum value.

Characteristic curves analog output

- **0 … 20mA**

For the following graphic “min Range” is used for 0% and “max Range” is used for 100%.

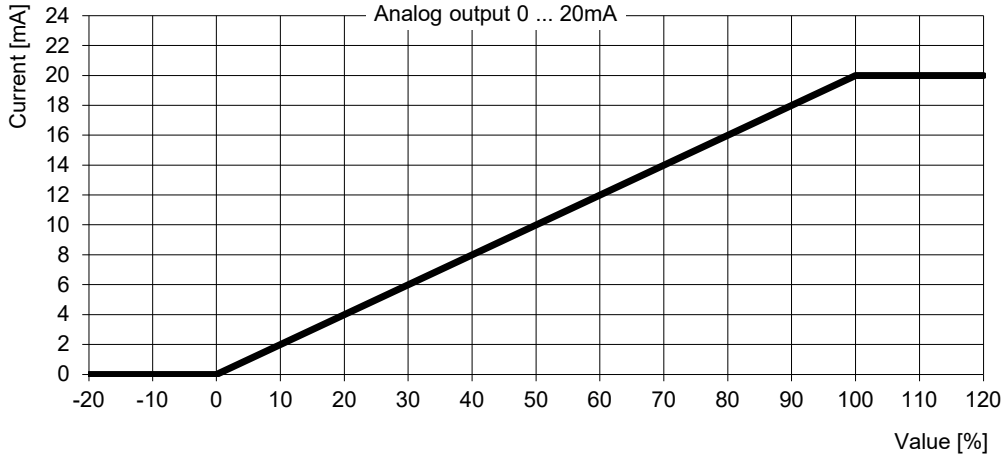

Value	Current [mA]
Smaller 0%	0
0% (min Range)	0
Between 0% and 100%	Linear interpolation from 0 … 20 mA
100% (max Range)	20
Bigger 100%	20

Figure 13: Characteristic curve 0 … 20mA

- **4 … 20mA**

For the following graphic “min Range” is used for 0% and “max Range” is used for 100%.

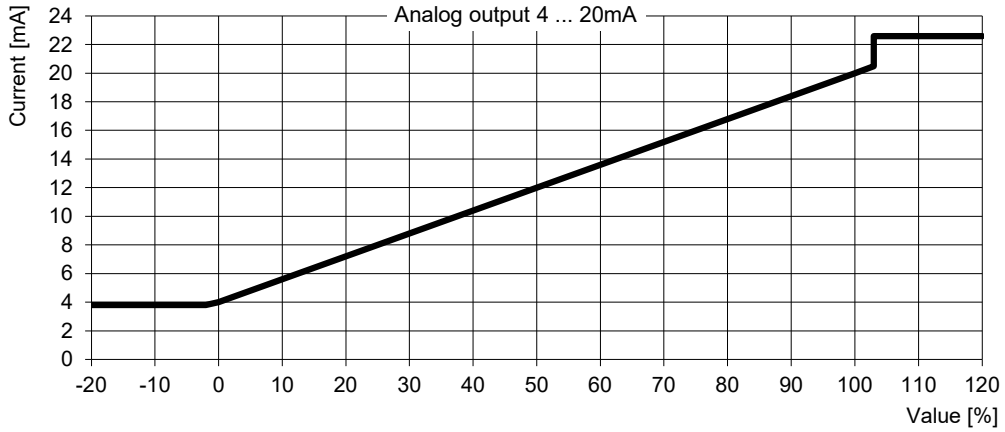

Value	Current [mA]
Empty pipe	3.5
Smaller -1.2%	3.8
Between -1.2% and 0%	Linear interpolation from 3.8 ... 4mA
0% (min Range)	4
Between 0% and 100%	Linear interpolation from 4 ... 20mA
100% (max Range)	20
Between 100% and 103%	Linear interpolation from 20 ... 20.5mA
Bigger 103%	22.6

Figure 14: Characteristic curve 4 … 20mA

3.2.6.2 Filter

The function ”Filter“ averages the analog output signal. Possible settings:

Setting range: Weak, Medium, Strong, Off
Default setting: Medium

With weak averaging, the analog output signal reacts more quickly. With strong averaging, the response of the analog value is slowly.

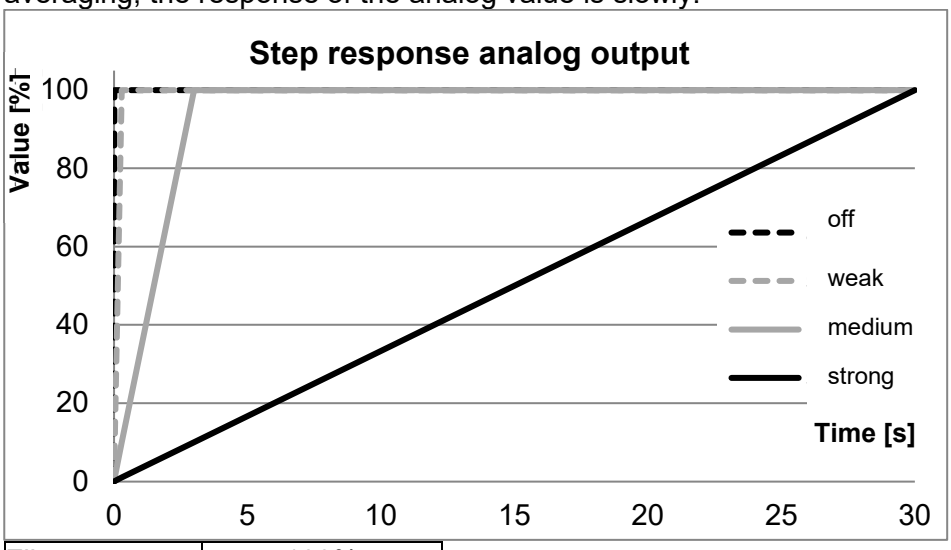

Filter	100%
off	16ms
weak	0.3s
medium	3s
strong	30s

Figure 15: Function Filter of analog output

3.2.6.3 Output Value

In the menu all output values are visible. The optional features are only available when they are ordered. If a not ordered function is selected, the output will be set on “Flow”.

NOTICE!

Setting range: Flow, PID-Controller, Speed of Sound, Temperature
Default setting: Flow

Flow measurement for the analog output
Via the analog output of the measured flow is output.

PID Controller for the analog output (Option)
It is possible to implement flow control on the analog output. FlowSoft* is required to set the parameters (target flow, proportional factor, integral factor and differential factor).
If this function is selected via the menu (see point 3.1.1 Fig. 11. Menu structure Flowmax 54i in the section Analog Output QA - Output Value) and the function PID Controller has not been ordered, the output is set to “Flow”.

*FlowSoft is the MIB programming software (option)

Speed of Sound for the analog output (Option)
When this function via the menu (see Section 3.1.1 Fig 9. Menu structure Flowmax 54i with analog output QA - Output value) is selected and the function Speed of sound was not ordered, the output will be set on “flow”.

Temperature measurement for the analog output
The measured temperature is displayed via the analog output.

The temperature sensor is not in contact with the medium. It is used to calculate the expansion of the measuring channel in the case of temperature fluctuations. The sensor is influenced by the ambient temperature. The temperature value reacts slowly because it measures the plastic temperature inside the sensor pocket.

Min Range
The value at which 0 or 4 mA is to be displayed is set here in the selected unit.

Setting range:	DN25:	0 … 900.0000 in 0.0006 steps
	DN32 … DN50:	0 … 900.00 in 0.06 steps
Default setting:	0 l/min	

Max Range
The value at which 20 mA is to be displayed is set here in the selected unit.

Setting range:	DN25:	0.0001 … 900.0000 in 0.0006 steps
	DN32 … DN50:	0.01 … 900.00 in 0.06 steps
Default setting:	max Flow of the flowmeter:	
	DN25: 180 l/min	
	DN32: 300 l/min	
	DN40: 480 l/min	
	DN50: 900 l/min	

NOTE!
The value "Min Range" cannot be set greater than or equal to the "Max Range".

NOTICE!

3.2.7 Digital Output Q1 and Q2 (Q2 only available with 8-pin plug)

The digital outputs Q1 and Q2 can be used as pulse output, to display the “TPG” status, to signal the empty pipe message, to control a dosing valve or for limit value monitoring.

If “Pulse output” is selected on one of the two digital outputs, the “Frequency output” setting can't be selected on the other digital output.

In the case of a short circuit or overload, the digital outputs are set to high resistance for 2 s after approx. 100 µs. The output is then retried.

Setting range:	Off, Pulse Output, TPG, Frequency output, Empty Pipe, Dosing, Lower Limit, Upper Limit, Negative Flow
Default setting Q1:	Pulse Output
Default setting Q2:	Empty Pipe

Depending on the application, NPN or PNP logic can be selected.

Setting range:	PNP / NPN, normal closed / normal open
Default setting Q1:	PNP normal open
Default setting Q2:	PNP normal open

Pulse output / Frequency output

	Empty pipe	Filled, no flow	Filled, flow
0V normal closed	0V	0V	0V Pulses
0V normal open	0V	0V	0V Pulses
24V normal closed	High resistance	High resistance	24V Pulses
24V normal open	High resistance	High resistance	24V Pulses

TPG output

	Empty pipe	Air/particles in the measuring pipe in TPG mode	Filled pipe
0V normal closed	0V	High resistance	0V
0V normal open	High resistance	0V	High resistance
24V normal closed	24V	High resistance	24V
24V normal open	High resistance	24V	High resistance

Empty pipe output

	Empty pipe	Air/particles in the measuring pipe in TPG mode	Filled pipe
0V normal closed	High resistance	0V	0V
0V normal open	0V	High resistance	High resistance
24V normal closed	High resistance	24V	24V
24V normal open	24V	High resistance	High resistance

Dosing output

	Startup of device	While dosing	Before/after dosing
0V normal closed	High resistance	High resistance	0V
0V normal open	High resistance	0V	High resistance
24V normal closed	High resistance	High resistance	24V Pulses
24V normal open	High resistance	24V Pulses	High resistance

Lower limit output

	Below lower limit	Between the limits	Above upper limit
0V normal closed	0V	High resistance	High resistance
0V normal open	High resistance	0V	0V
24V normal closed	24V	High resistance	High resistance
24V normal open	High resistance	24V	24V

Upper limit output

	Below lower limit	Between the limits	Above upper limit
0V normal closed	High resistance	High resistance	0V
0V normal open	0V	0V	High resistance
24V normal closed	High resistance	High resistance	24V
24V normal open	24V	24V	High resistance

IMPORTANT!
With an inductive load, e.g. relays, an additional freewheeling diode must be installed antiparallel to the load.

IMPORTANT!

Example 1: Flowmax 54i via NPN (0V), external relay

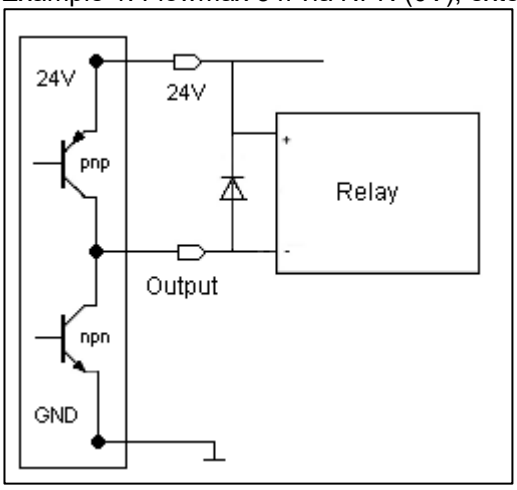

Figure 16: Connecting Digital output to relay

Example 2: Flowmax 54i via PNP (24V), external counter e.g. PLC

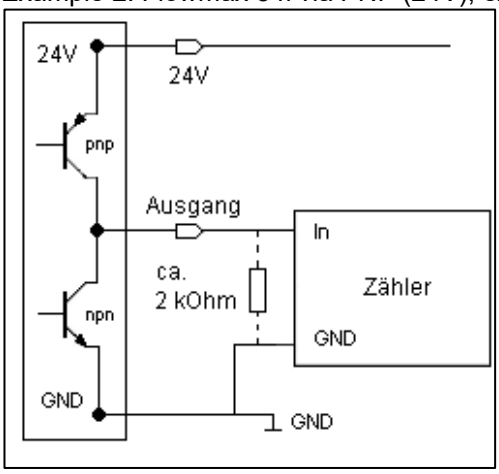

Figure 17: Connecting Digital output to counter

With high impedance input counters and high-speed counting, it may be necessary to include a resistor to have clean edges.

3.2.8 Digital Input I1 (Only available with 8-pol pin plug)

Flowmax 54i has a digital input to which the functions can be assigned. For example, to start a dosing process, the line must be connected to 24V. The dosing parameters can be stored in the device either via the device display or FlowCon 200i.

Setting range: Off, Dosing, Set Offset, Reset Counter, Creeping Flow Off
Default setting: Off

The dosing input is locked so that a re-start is not possible during a running dosing process.

Available input functions:

	Dosing	Set Offset	Reset Counter	Creeping Flow Off	Off
0V	-	-	-	-	-
24V	Rising edge: 0 → 24V Start dosing	Rising edge: 0 → 24V Set Offset	Rising edge: 0 → 24V Counter is reset	State: Deactivating creeping flow	-
		Only perform when the medium is standing still			

IMPORTANT!
The “Set Offset” input function may only be carried out when the medium is at a standstill. If a Set Offset is carried out when the flow is active, incorrect measurements may occur until the adjustment has been carried out correctly.

IMPORTANT!

3.2.9 Diagnostic

Current device parameters such as software versions etc. can be viewed under the “Diagnostics” menu item. This information is required for servicing.

NOTE!
Before contacting MIB, please note the values "Fab. no.", "Versions", "Values".

NOTICE!

3.2.9.1 Testing Flow

A test flow can be set for checking the process system. In this case, the measuring device behaves as if the test flow is actually flowing, even if the measuring device is empty. To start the simulation, “Start” must be selected “Stop” ends the simulation.
When the device is restarted, the test flow is stopped and the value is deleted.

Setting range: DN25: 0 … 192.0 l/min in steps of 0.006 l/min
DN32 … DN50: 0 … 1920.0 l/min in steps of 0.06 l/min

3.3 Overview of default settings

Function	Default settings
Pulse value	10 ml/pulse
Digital output Q1	Pulse output as PNP (24V) normal open
Digital output Q2 *	Empty pipe output as PNP (24V) normal ope
Digital input I1 *	No function assigned
Analog output QA	Flow as 4 … 20mA signal 20mA → DN25: 180 l/min DN32: 300 l/min DN40: 480 l/min DN50: 900 l/min
Creeping suppression	DN25: 5 l/min DN32: 9 l/min DN40: 18 l/min DN50: 36 l/min

3.4 General Information

Please check the following before powering the flowmeter for the first time:

- Check the electrical connections and cable allocations.
- Check the installation position of the flowmeter. Is the direction of the arrow on the housing/name plate and the actual flow direction in the pipe congruent?

IMPORTANT!

Once these checks have been carried out and the corresponding conditions have been checked, switch on the power supply. The device will reach optimum operating status after 30 minutes. See 3. Commissioning.

Flowmax 54i is operational!

4. Exchange of flowmeter

- **Switch off power before disconnecting the electrical connections!**
- **When removing the device, observe the safety instructions in chapter 2.3 Electrical wiring.**

- Please note that after replacing the flowmeter
  a) Specific programming of the previous flowmeter should be noted and programmed to the new flowmeter
  b) when using the dosing function, set a quantity

If the device requires a configuration change, the display and programming unit FlowCon 200i may be required (see section 6. Accessories).

Repair, hazardous substances

Before sending the flowmeter Flowmax 54i for repair, the following precautions must be taken:

- **Clean all process chemicals from the device. Fully rinse the flow path. Please pay close attention to the process fittings. All media must be removed before returning. This is particularly important, if the medium to be measured is health hazardous.**

  Measuring devices that are not or insufficiently cleaned will be returned to the sender for cleaning without testing!

- **Always enclose a declaration of decontamination with the measuring device with as precise a description of the fault as possible, the application in which the measuring device was used and the chemical-physical properties of the measured medium.**

Costs resulting from insufficient cleaning of the measuring device for possible disposal or personal injury (chemical burns, etc.) will be charged to the sender of the measuring device.
To ensure that your repair order is processed quickly and efficiently, it is important that you provide us with a contact person with a phone number and e-mail address who can answer any technical questions our service staff may have.

5. Technical specifications

5.1 Dimensions and weight

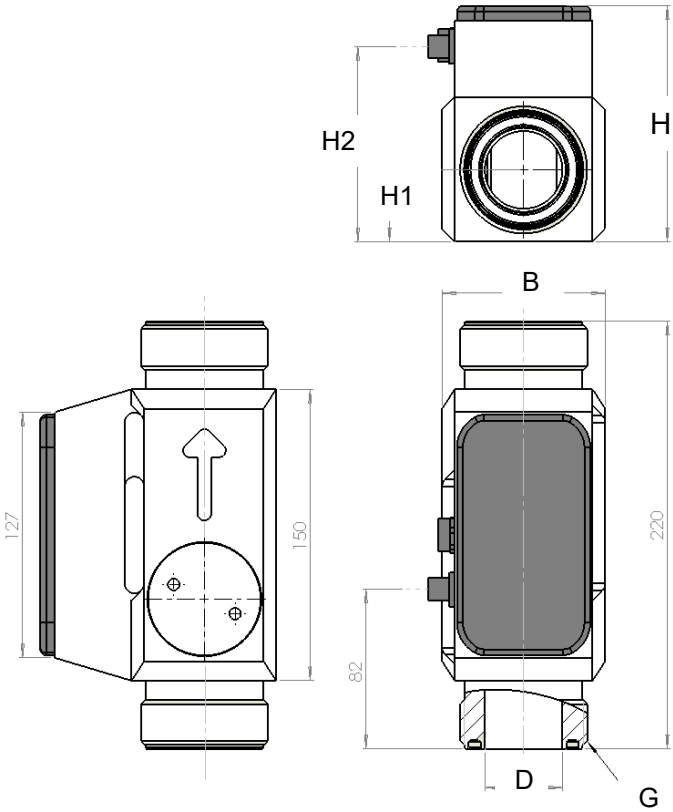

Nominal diameter	Length [mm] [in]	D [mm] [in]	B [mm] [in]	H1 [mm] [in]	H2 [mm] [in]	H [mm] [in]	Weight [g] [lbs]
DN25 G1 ½	220 8.66	23 0.91	73 2.87	33 1.3	95 3.74	116 4.57	1000 2.20
DN32 G2		32 1.26	80 3.15	35 1.38	99 3.9	120 4.72	1100 2.43
DN40 G2 ¼		40 1.57	84 3.31	37 1.46	101 3.98	122 4.8	1100 2.43
DN50 G2 ¾		52 2.05	95 3.74	43 1.69	110 4.33	131 5.16	1300 2.87

The process connection thread is a GF-thread.

5.2 Technical specifications

Housing

Nominal diameters	DN25, 32, 40, 50
Connection	GF external thread G1 ½, G2; G2 ¼, G2 ¾
Medium temperature	0 ... +50°C
Protection class	IP 65
Pressure nominal	PN10
Material	PE-HD (Polyethylene)

Electronics

Power supply	18 ... 30 VDC
Power input	at 24 VDC = 3.6 W
Connection	Plug 5 pins, option plug 8 pins
Ambient temperature	-15 ... +50°C
Storage temperature	-15 ... +50°C
Analog output QA	0/4 ... 20 mA, 0 … 10 V (option) Min Range and max Range adjustable, Ground connected to supply ground Error Signal according to NAMUR NE43 at 4 … 20 mA
Digital output Q1/2	via transistor npn- and pnp-logic, max. 100 mA output voltage according to DIN 19240: ≤5 V means LOW ≥12 V means HIGH Short cut resistant Frequency 0 ... 10 kHz
Data interface	Communication interface RS485 (option); MODBUS (option)
Measuring deviation	± 2% o.r. ± 0.3% f.s. (o.r. = of reading, f.s. = full scale) option ± 1% o.r. ± 0.3% f.s. Reference conditions (VDE/VDI 2642) Different in TPG mode
Measuring range	DN25: 5 … 180 l/min DN32: 9 … 300 l/min DN40: 18 … 480 l/min DN50: 36 … 900 l/min
Repeatability:	0.5%

The measuring system Flowmax 54i meets the general EMC immunity requirements according to CE, EN 61000-6-3, EN 61000-4-2, EN 61000-4-3, EN 61000-4-4, EN 61000-4-5, EN 61000-4-6. It is in conformity with the requirements of the EC directives and has the CE label.

Pressure drop

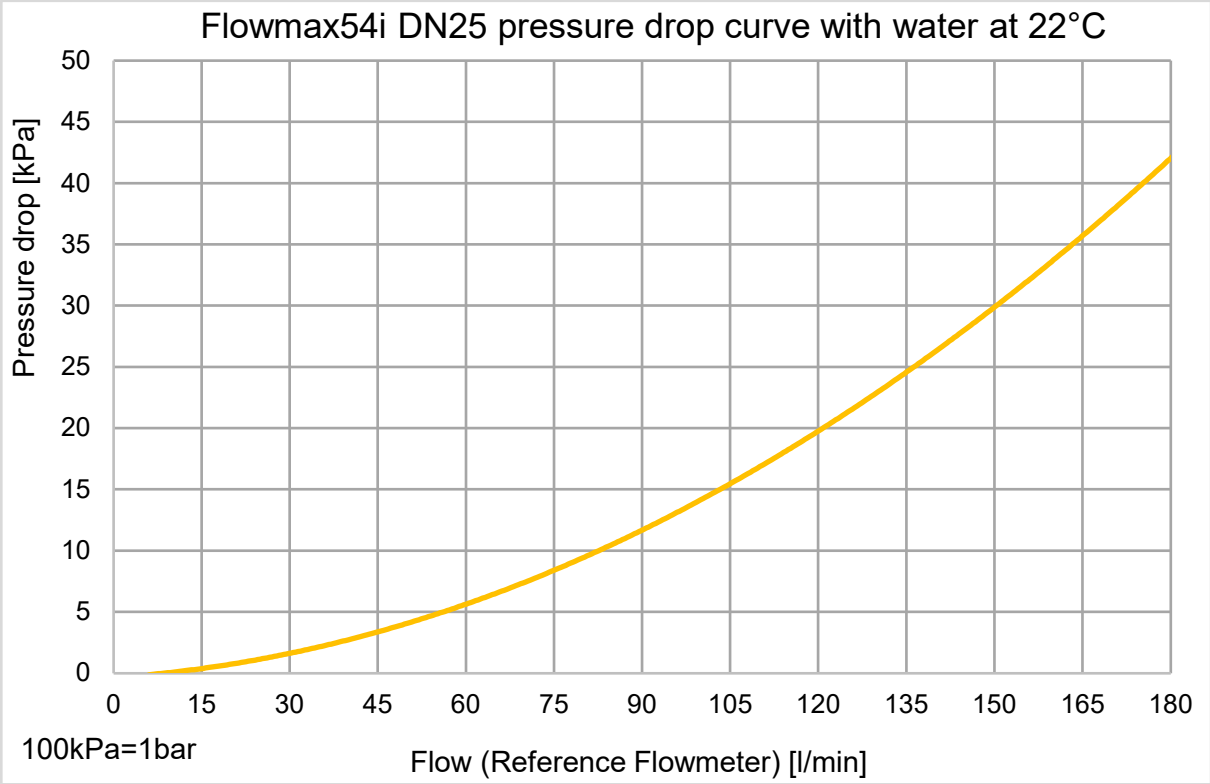

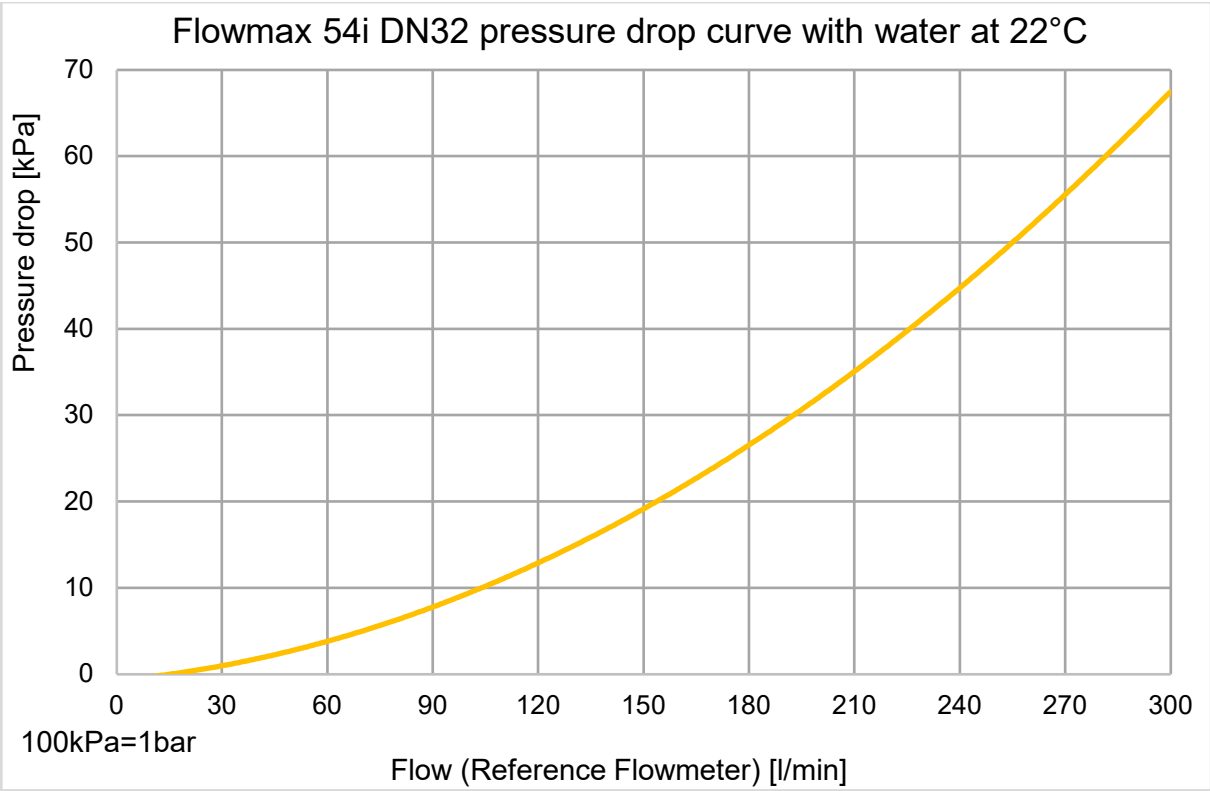

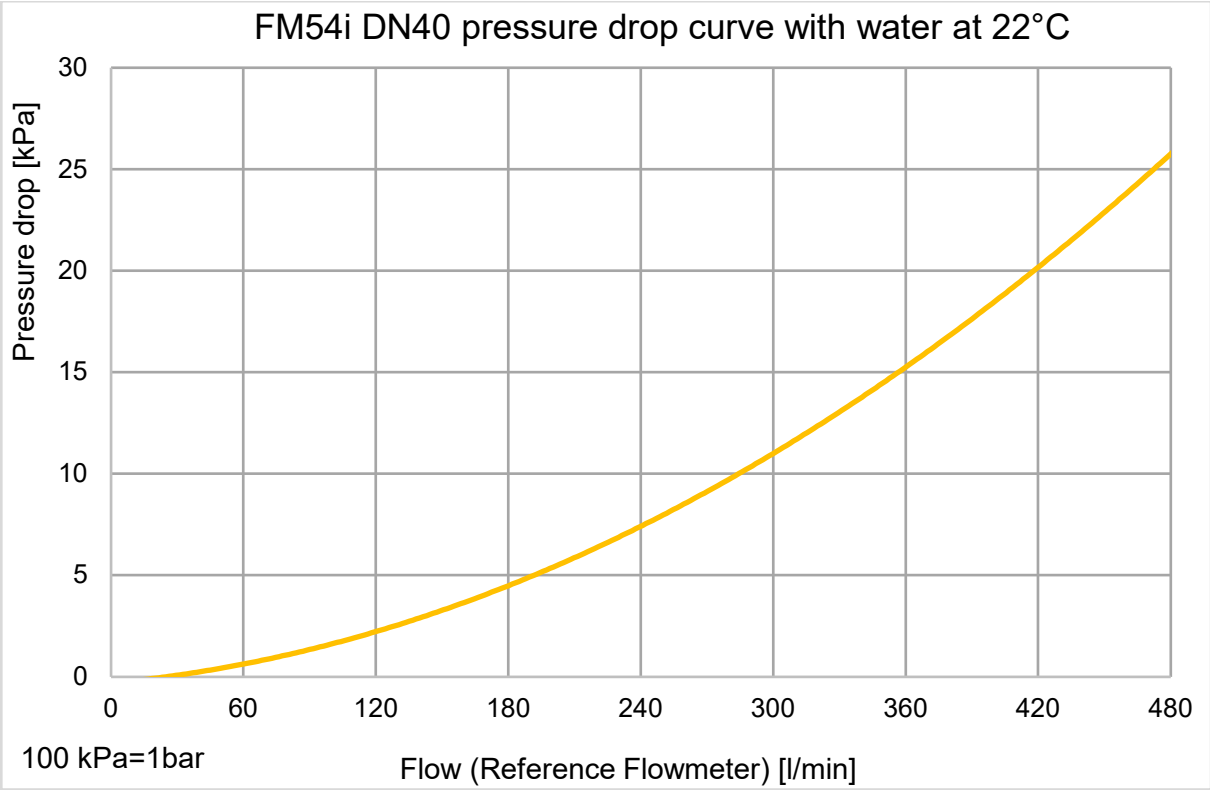
FM54i DN40 pressure drop curve with water at 22°C
Pressure drop [kPa]
30
25
20
15
10
5
0
0
60
120
180
240
300
360
420
480
100 kPa=1bar
Flow (Reference Flowmeter) [l/min]

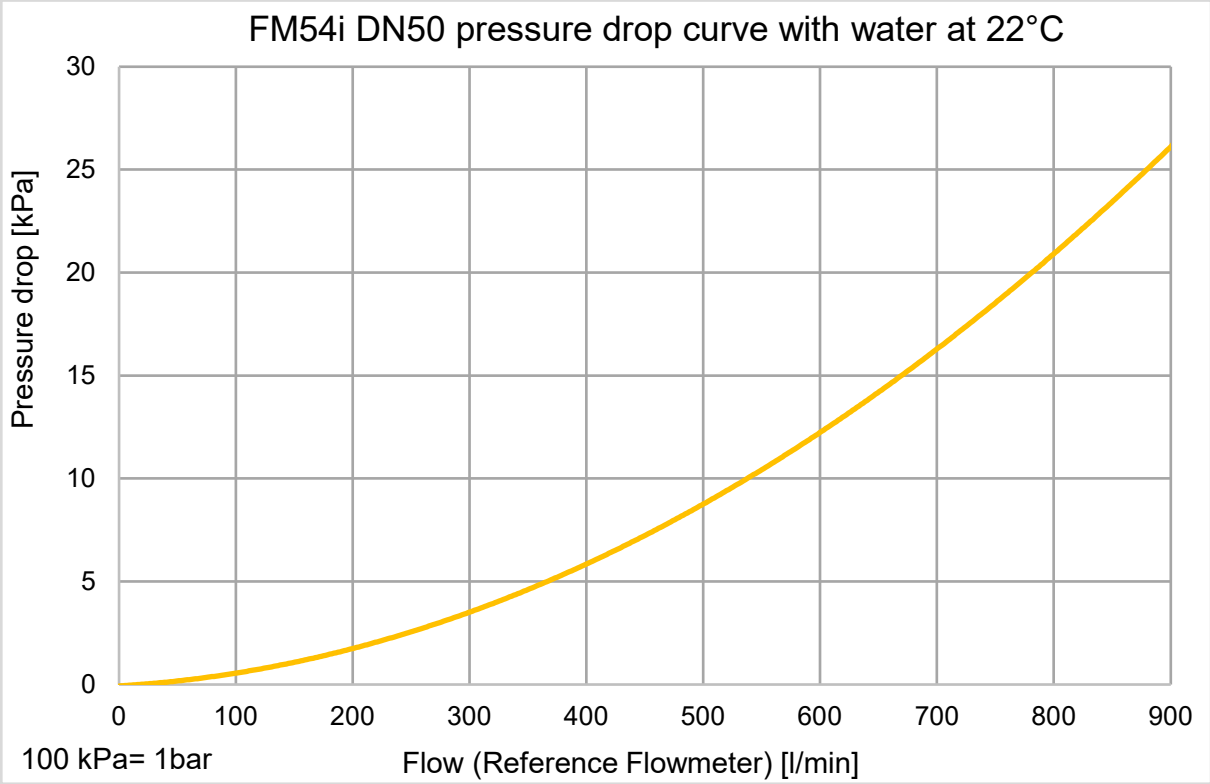
FM54i DN50 pressure drop curve with water at 22°C
Pressure drop [kPa]
30
25
20
15
10
5
0
0
100
200
300
400
500
600
700
800
900
100 kPa= 1bar
Flow (Reference Flowmeter) [l/min]

Possible error text Flowmax 54i

Display text	Description	Behavior
Empty Pipe	Message appears if empty pipe or too many bubbles/particles detected, no flow measurement possible.	Display flashing + text
Low Voltage	Message appears if power supply voltage is below 16V, outputs are deactivated.	Display flashing + text
Short Circuit	Message appears if the digital outputs are overloaded (>100mA), outputs are deactivated.	only text
Lower Limit	If the flow falls below a set flow limit and if limit values are configured as an output. The configured output switches at the same time.	only text
Upper limit	If a set flow limit is exceeded and if limit values are configured as an output. The configured output switches at the same time.	only text
Sonic Speed	The measured speed of sound is not outside the range of the window. May occur with media with speed of sound outside the measuring window or with very small air bubbles.	only text
Overflow	Message appears if the measuring range is exceeded. This may also occur during start-up or when there are air bubbles. The message is 30 seconds visible even when the flow is within the allowable range. However, the measurement still works.	only text, message is displayed 30 sec

6. Accessories

Flowmax connection socket
Flowmax connection socket is used to power and connect Flowmax 54i to an external control unit.
Ordercode 507321 (Socket 5 pins)
Ordercode 507084 (Socket 8 pins)

FlowCon 200i
External display and programming unit for use in combination with ultrasonic flow measuring devices Flowmax. FlowCon 200i can also be installed as separate display for Flowmax.
Ordercode 908873 (FlowCon 200i for 5-pin Flowmax)
Ordercode 908891 (FlowCon 200i for 8-pin Flowmax)

7. Shipment

- Flowmax 54i
- 2 O-ring-gaskets for hydraulic connection

Appendix

Examples of operation:

Enter Password

Key	Display picture
Set	Password
4 x ∧	40000
Set	X0000
∧	X1000
Set	XX000
4 x ∧	XX400
Set	XXX00
∧	XXX10
Set	XXXX0
4 x ∧	XXXX4
Set	

Reset Counter

Set	Dosing Media General Settings Display Analog Output QA
Set	General Settings Reset Counter
Set	General Settings Reset Counter Start?
Set	General Settings Reset Counter Done

Set Offset

Use this function only when Flowmax 54i is completely filled with liquid, and there is no flow. If the offset is set while flow is present or when the pipe is empty it will cause an offset drift what results in a faulty measurement.

Set	Dosing Media General Settings Display Analog Output QA
Λ	Language Dosing Media General Settings Display
Set	Media Set Offset
Set	Media Set Offset Start?
Set	Media Set Offset Done

1-point correction

The 1-point correction is used to adjust the measuring device to one operating point.
For this purpose, a typical volume for the application is filled into a container and the weight is determined using a scale. Caution: Subtract the weight of the container.
Including the density of the medium results in the volume (volume = mass/density). This is compared with the display of the measuring device.
If, for example, the measuring device shows 2% more than determined with the scale, a value of -02.0% must be entered for the 1-point correction.

Set	Dosing Media General Settings Display Analog Output QA
Λ	Language Dosing Media General Settings Display
Set	Media Set Offset
V	Media 1-Pt.-Correction
Set	Media 1-Pt.-Correction -00.0%

Setting the sign
Setting the value

Set	Media 1-Pt.-Correction Done

To enable the correction back to delivery, a correction of 00.0% is to be entered.

Display rotate 90°

Set	Dosing Media General Settings Display Analog Output QA
V	Media General Settings Display Analog Output QA Digital Output Q1
Set	Display Units
2 x V	Display Rotate Display
Set	Display Rotate Display 0°
3 x V	Display Rotate Display 90°
Set	Display Rotate Display 90° Done

To return your display to its delivery setting, choose Rotate Display 0°.

MIB GmbH
Messtechnik und Industrieberatung
Bahnhofstr. 35
D-79206 Breisach
Tel. 0049 / (0)7667 / 20 777 90
Fax 0049 / (0)7667 / 20 777 99
E-Mail: info@mib-gmbh.com
Internet: http://www.flowmax.de

MIB GmbH
Messtechnik & Industrieberatung